Paslode®

MODEL 3150/38 I16
MODEL 3200/50 I16P
MODEL 3150/38 I18
MODEL 3150/38 I18Q
MODEL 3200/50 I16PQ
STAPLERS

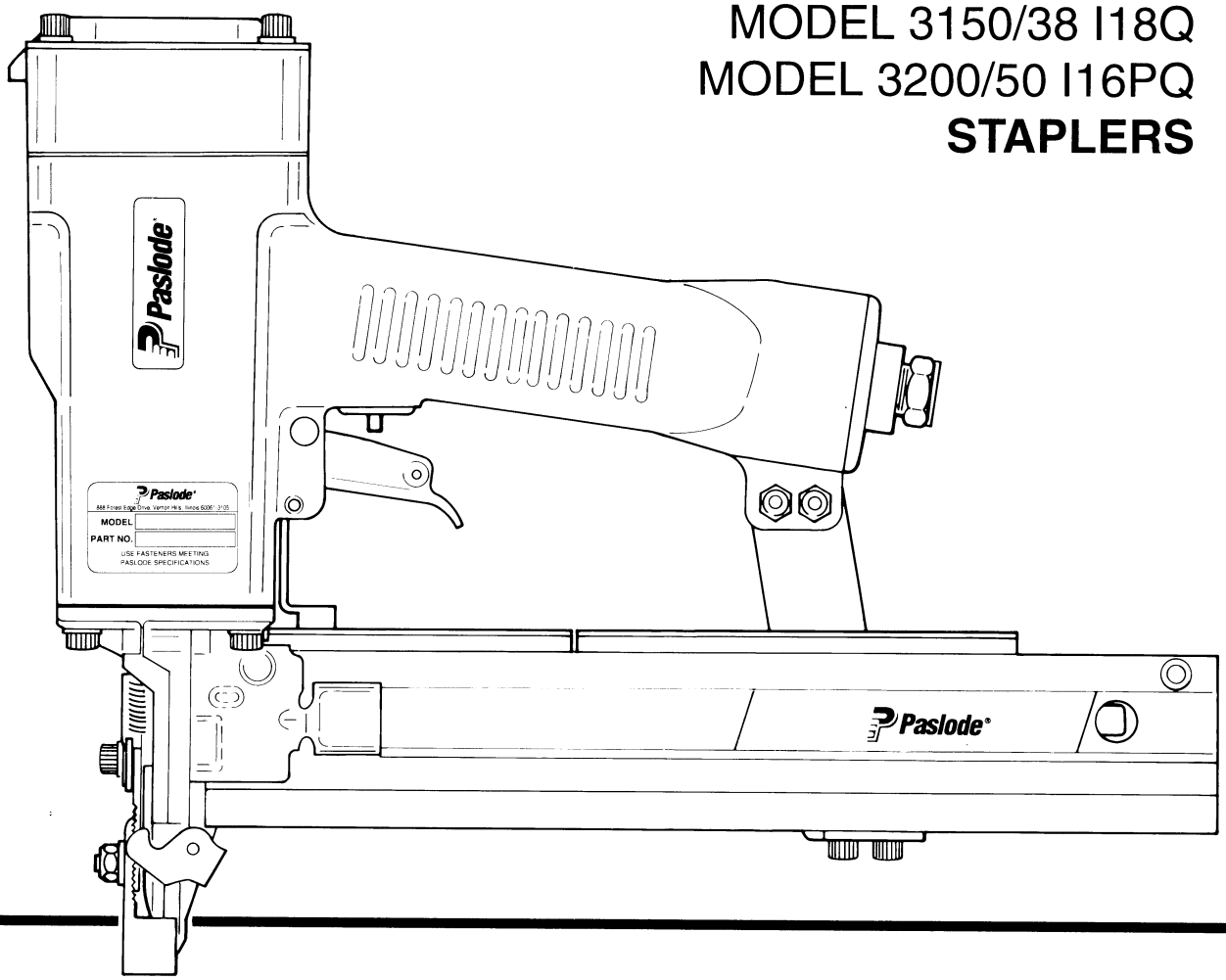

TOOL SCHEMATIC AND PARTS

IMPORTANT!

DO NOT DESTROY

Always refer to safety and maintenance manual #403606 for detailed information on this tool. It is the customer's responsibility to have all operators and service personnel read and understand this information.

PARTS LEGEND

3150/38 I16, 404023
3200/50 I16P, 402999
3150/38 I18, 404265
3150/38 I18Q, 404265X (EUROPE)
3200/50 I16PQ, 404264 (EUROPE)

1	091362	4	Socket Head Capscrew, 1/4-20 x 1-1/2" (3150-I16 and I18)
	404229	4	Socket Head Capscrew, 1/4-20 x 2-1/4" (3200-I16)
2	002187	8	Lock Washer, 1/4"
3	404242	1	Air Diffuser
▲ 4	006310	1	Socket Head Capscrew, #6-32 x 1/2"
6	402704	1	Cap (3150/38 I16, I18, I18Q)
	402705	1	Cap (3200/50 I16P, I16PQ)
7	402717	1	Conical Spring
8	404230	1	Retaining Ring
*9	091537	1	"O" Ring, Main Valve Assembly
10	404122	1	Upper Valve Piston
11	404055	1	Post, Main Valve
*12	404256	1	"O" Ring, Main Valve Post
*13	402723	1	"O" Ring, Piston
14	403563	1	Piston
15	403582	1	Jam Nut
*16	403725	1	Driver Blade (3150/38 I18, I18Q)
	404021	1	Driver Blade (3150 I16)
	403726	1	Driver Blade (3200/50 I16P, I16PQ)
17	402725	1	Seal, Sleeve
18	405245	1	Sleeve (3150/38 I16, I18, I18Q)
	405246	1	Sleeve (3200/50 I16P, I16PQ)
*19	402728	1	"O" Ring, Sleeve
*20	402729	1	"O" Ring, Sleeve
21	403854	1	Retainer, Bumper
*22	403853	1	Bumper
23	403505	1	Seal, Driver Blade (3150/38 I18, I18Q)
	402509	1	Seal, Driver Blade (3150/38 I16, 3200/50 I16P, I16PQ)
*24	402707	1	Gasket, Cap
25	402701	1	Housing
26	404939	2	Logo, Housing (All Models)
27	096893	1	Nameplate (3150/38 I16, I18, 3200/50 I16P)
	405553	1	Nameplate (3150/38 I18Q, 3200/50 I16PQ)
28	402708	1	Gasket, Flange
29	402706	1	Flange
▲ 30	009041	4	Socket Head Capscrew, 1/4-20 x 3/4"
31	405144	1	Trigger
32	402079	1	Pin, Trigger
33	402668	1	Retaining Washer
34	404054	1	Seal Main Valve
*35	090927	1	"O" Ring
*36	092775	1	"O" Ring
37	026133	2	Roll Pin, 1/8" Dia. x 1" Lg.
38	401958	1	Valve Body
*39	092174	1	"O" Ring, Valve Body
40	097746	1	Valve Pin
41	097748	1	Spring, Valve Pin
42	091591	1	"O" Ring, End Plug
▲ 43	401940	1	End Plug
44	091622	1	Reducing Pipe Bushing
45	004502	4	Socket Head Capscrew, #10-32 x 5/8"
46	092037	4	Lock Nut, #10-32
47	402741	1	Rail Bracket (3150/38 I16, I18, I18Q)
	402781	1	Rail Bracket (3200/50 I16P, I16PQ)
▲ 48	004224	3	Socket Head Capscrew, #10 - 32 x 3/8"
*49	092773	1	"O" Ring
50	404056	1	Lower Valve Piston
51	403716	2	Socket Head Capscrew #10-32 x 1/4"
52	402629	2	Hardened Washer
53	402794	1	Intermediate Work Contacting Element
*54	402738	1	Spring
55	402736	1	Flat Washer, #10
56	402793	1	Work Contacting Element (3150/38 I16, I18, I18Q)
	403207	1	Work Contacting Element (3200/50 I16P, I16PQ)
57	402792	1	Upper Work Contacting Element
*58	402734	1	Spring
59	403502	1	Front Guide (3150/38 I18, I18Q)
	403851	1	Front Guide (3150/38 I16)
	403458	1	Front Guide (3200/50 I16P, I16PQ)
60	404232	2	Socket Head Capscrew, #8-32 x 13/16"
61	404698	2	Roll Pin Assembly
62	403503	1	Back Plate (3150/38 I18, I18Q)
	403852	1	Back Plate (3150/38 I16)
	403459	1	Back Plate (3200/50 I16P, I16PQ)
63	402730	1	Pivot Pin, Front Guide
64	092176	1	Roll Pin, 5/32" Dia. x 1-3/8" Lg.
65	405078	1	Spring, Front Guide Latch (3150/38 I16, I18, I18Q)
	405079	1	Spring, Front Guide Latch (3200/50 I16P, I16PQ)
66	402789	1	Latch, Front Guide (3150/38 I16, I18, I18Q)
	403206	1	Latch, Front Guide (3200/50 I16P, I16PQ)
**67	500459	1	Warning Sign
68	402748	1	Pivoting Rail Cover Assembly (3150/38 I18, I18Q)
	402780	1	Pivoting Rail Cover Assembly (3200/50 I16P)
	402749	1	Pivoting Rail Cover Assembly (3150/38 I16, 3200/50 I16Q)
69	403508	1	Rail and Rail Cover Assembly (3150/38 I16, I18, I18Q)
	402518	1	Rail and Rail Cover Assembly (3200/50 I16P, I16PQ)
70	402731	1	Logo, Rail
71	402740	2	Roll Pin, 3/32" Dia x 7/16" Lg.
72	402798	1	Latch, Follower Button
73	402799	1	Spring, Follower Latch
74	402797	1	Retaining Bushing
75	091568	1	Pan Head Screw, #6-32 x 1/4"

* Denotes normal wear items.

** Make sure warning label (500459) is properly affixed. Replace if necessary. Label available at no charge through the Service Dept.

▲ Apply Loctite 242 (Blue) Part No. 093500

➔ Denotes new change.

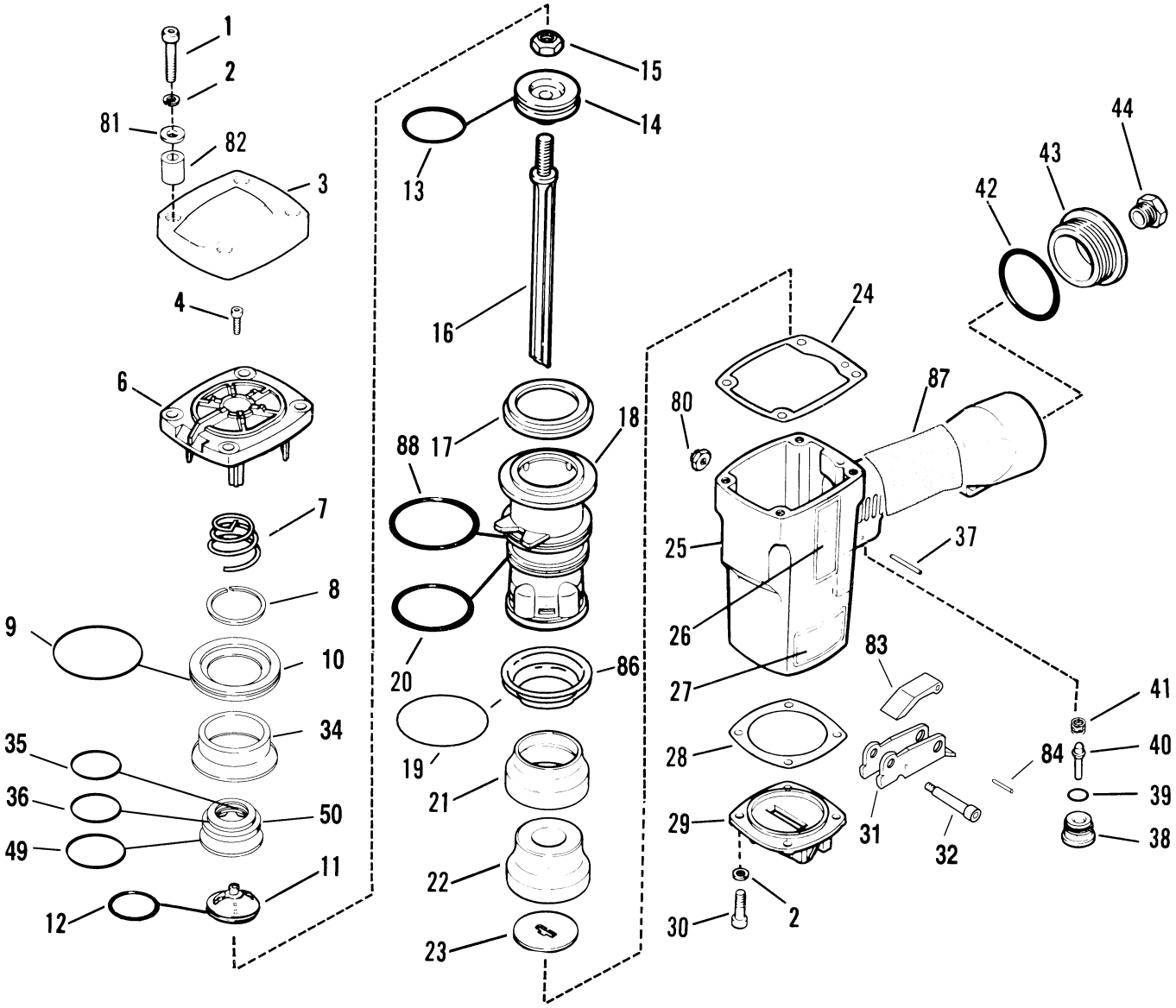

WARNING

All parts must be periodically inspected and replaced if worn or broken. Failure to do this can affect the tool's operation and present a safety hazard.

PARTS LEGEND *Continued*

*76	091532	1	Negator
77	091534	1	Drum, Negator
78	402743	1	Pin, Negator Drum
79	402516	1	Follower
80	404325	1	Stop Nut, #8-32
81	091447	4	Flat Washer
82	404243	4	Spacer, Diffuser
83	405147	1	Lever, Trigger
84	005849	1	Roll Pin
85	405521	1	Fastener Label (3200/50 I16PQ)
	405522	1	Fastener Label (3150/38 I18Q)
86	405243	1	Flange, Sleeve
87	500488	1	Grip Handle
88	091966	1	O-Ring

3150/38 I16
404023
3200/50 I16P
402999
3150/38 I18
404265
3200/50 I16PQ
404264 (EUROPE)
3150/38 I18Q
404265X (EUROPE)

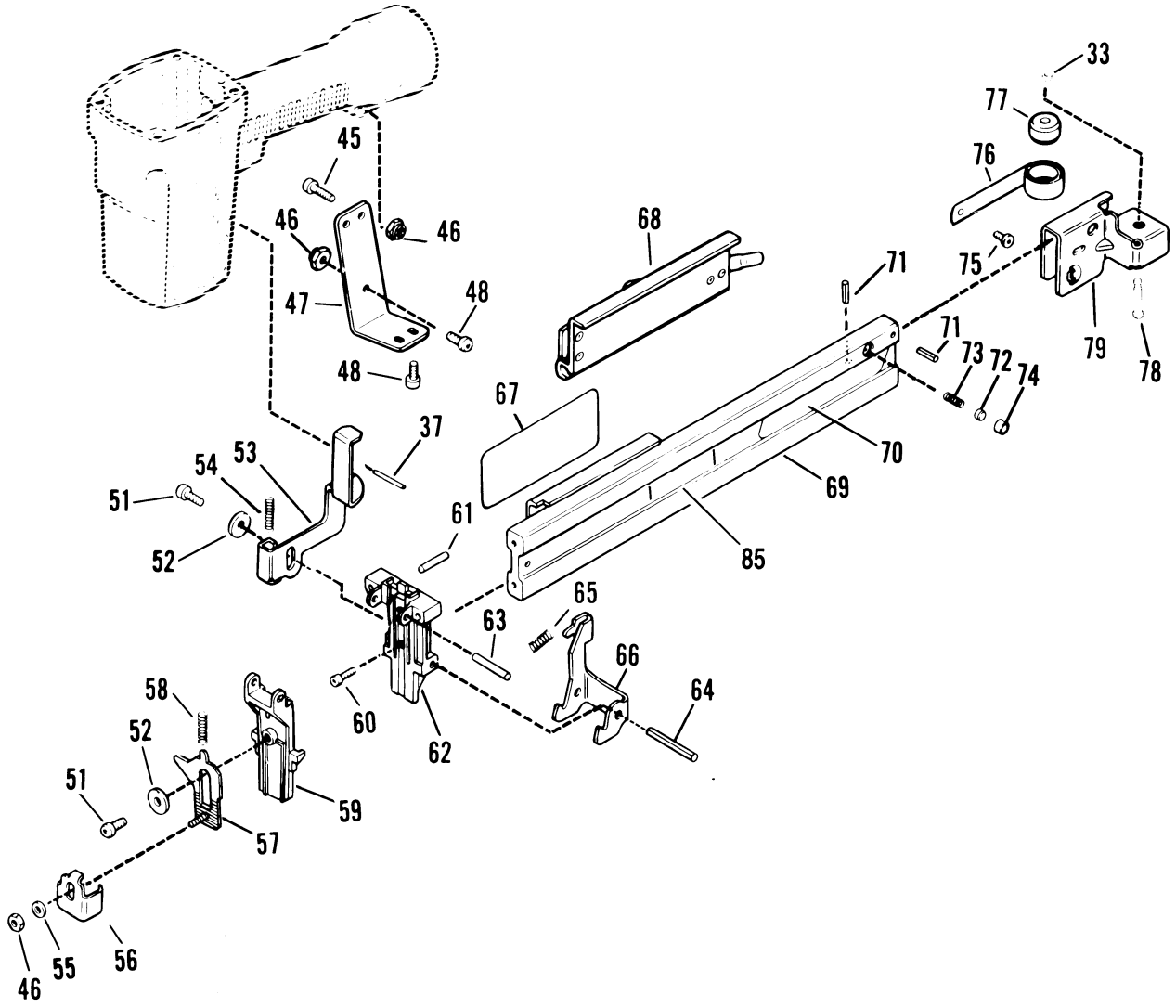

Note: Key 69, Rail and Rail Cover Assembly is supplied with keys 67, 70, 72, 73 and 74 assembled.

PARTS OFFERED AS ASSEMBLIES

403506 Piston Assembly (3150/38 I18, I18Q)
404022 Piston Assembly (3150/38 I16)
402511 Piston Assembly (3200/50 I16, I16PQ)

Includes

13	402723	1	"O" Ring, Piston
14	403563	1	Piston
15	403582	1	Jam Nut
16	403725	1	Driver Blade (3150/38 I18, I18Q)
	404021	1	Driver Blade (3150/38 I16)
	403726	1	Driver Blade (3200/50 I16P, I16PQ)

402709 Cap Assembly (3150/38 I16) (3150/38 I18, I18Q)

Includes

4	006310	1	Socket Head Capscrew, #6-32 x 1/2"
6	402704	1	Cap
7	402717	1	Conical Spring
11	404055	1	Post, Main Valve
12	404256	1	"O" Ring, Main Valve Post
	404188	1	Main Valve Assembly

402710 Cap Assembly (3200/50 I16P, I16PQ)

Includes

4	006310	1	Socket Head Capscrew, #6-32 x 1/2"
6	402705	1	Cap
7	402717	1	Conical Spring
11	404055	1	Post, Main Valve
12	404256	1	"O" Ring, Main Valve Post
	404188	1	Main Valve Assembly

404188 Main Valve Assembly

Includes

8	404230	1	Retaining Ring
*9	091537	1	"O" Ring, Upper Valve Piston
10	404122	1	Upper Valve Piston
34	404054	1	Seal, Main Valve
*35	090927	1	"O" Ring, Main Valve Assembly
*36	092775	1	"O" Ring,Main Valve Assembly
*49	092773	1	"O" Ring, Main Valve Assembly
50	404056	1	Lower Valve Piston

402408 Trigger Assembly

Includes

31	405144	1	Trigger
83	405147	1	Lever, Trigger
84	005849	1	Roll Pin

AIR CONSUMPTION CHART

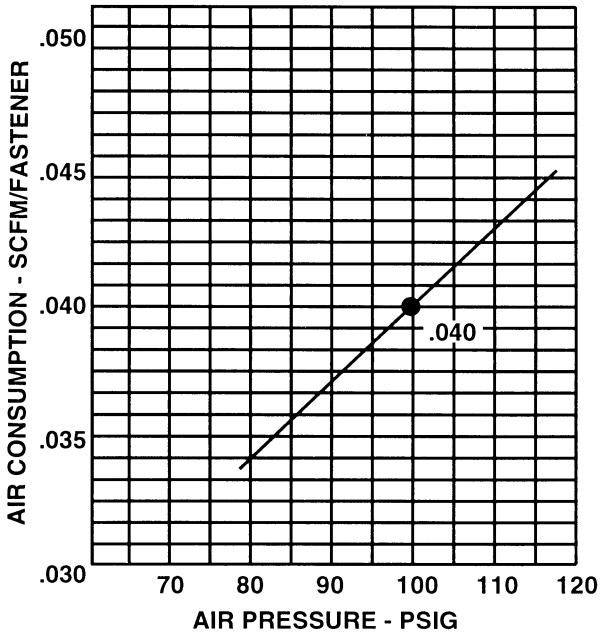

SAFETY INSTRUCTIONS

WEAR EYE AND HEARING PROTECTION

Always wear hearing protection and eye protection devices, including side shields when operating or working in the vicinity of a tool.

DO NOT EXCEED MAXIMUM RECOMMENDED AIR PRESSURE

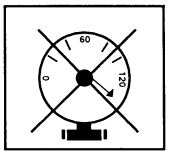

Operate the tool using only the recommended air pressure. Do not exceed the maximum air pressure marked on the tool. Be sure the air pressure gauge is operating properly and check it at least twice a day.

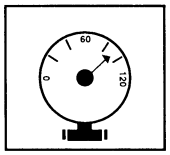

Never use any bottled air or gases such as oxygen to operate the tool since they could cause the tool to explode.

ACCESSORIES

Sequential Operating Kit

This special attachment is designed for sequential operation. The operator must depress and hold the work contacting element against the work surface before pulling the trigger. This sequence must be repeated each time the tool drives a fastener.

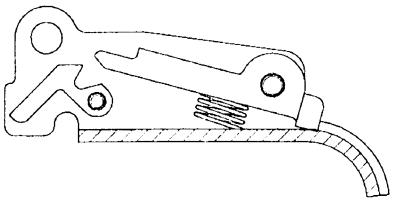

Part No. 406006

Remote Fire Valve

This valve via a positive air signal allows a machine mounted tool to be operated from an automatic air valve or foot pedal system.

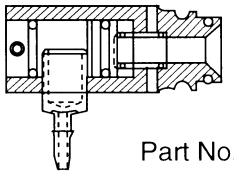

Part No. 1X0713

Kit for No Sag Clip

This kit converts the 3150-I16, Part No. 404023, for the attachment of no sag clips onto furniture frames.

Part No. 1X1204

Lubricants and Loctite

Chemplex 710 Grease 1 lb.	Part No. 403734
Lubricating Oil 8 oz.	Part No. 219026
Lubricating Oil with Antifreeze	Part No. 219090
Loctite 242 (Blue) 1 oz.	Part No. 093500

Degreaser Cleaner

Ideal Cleaner for all Paslode Tools

Part No. 219086

Belt Hook

Attaches to cap of tool enabling you to carry tool on belt holder

Part No. 219017

Belt Hook Holder

Attaches to work belt and carries tool using the above belt hook

Part No. 219028

Safety Glasses

Clear	Part No. 402510
Tinted	Part No. 402512

Vinyl Siding Guide

Enables positive placement of staple leg in center of siding slot

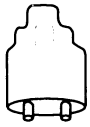

3150 - Part No. 219050
3200 - Part No. 219051

Shortened Blade for Model 3150-I16 Tool

Intended for use with Kit for No Sag Clip, Part No. 1X1204 in applications where staple will also be applied directly over spring wire.

Part No. 1X1209

Quick Exhaust Piston For Series 3000 Tools

Intended to help reduce fastener "stair stepping" in selected applications.

Part No. 1X1363

Tool Repair Kit

Repairs all air leaks except for the trigger valve.

Part No. 219222

Trigger Valve Repair Kit

Repairs all trigger valve air leaks.

Part No. 219224

Printed in U.S.A.
© 1998, Illinois Tool Works, Inc.

Paslode
An Illinois Tool Works Company
888 Forest Edge Drive
Vernon Hills, Illinois 60061

400582-8
2/98