Paslode®

MODEL 4250/65C
MODEL 4250/65CP
MODEL 4250/65 CQ
MODEL 4250/65 CPQ
COIL NAILERS

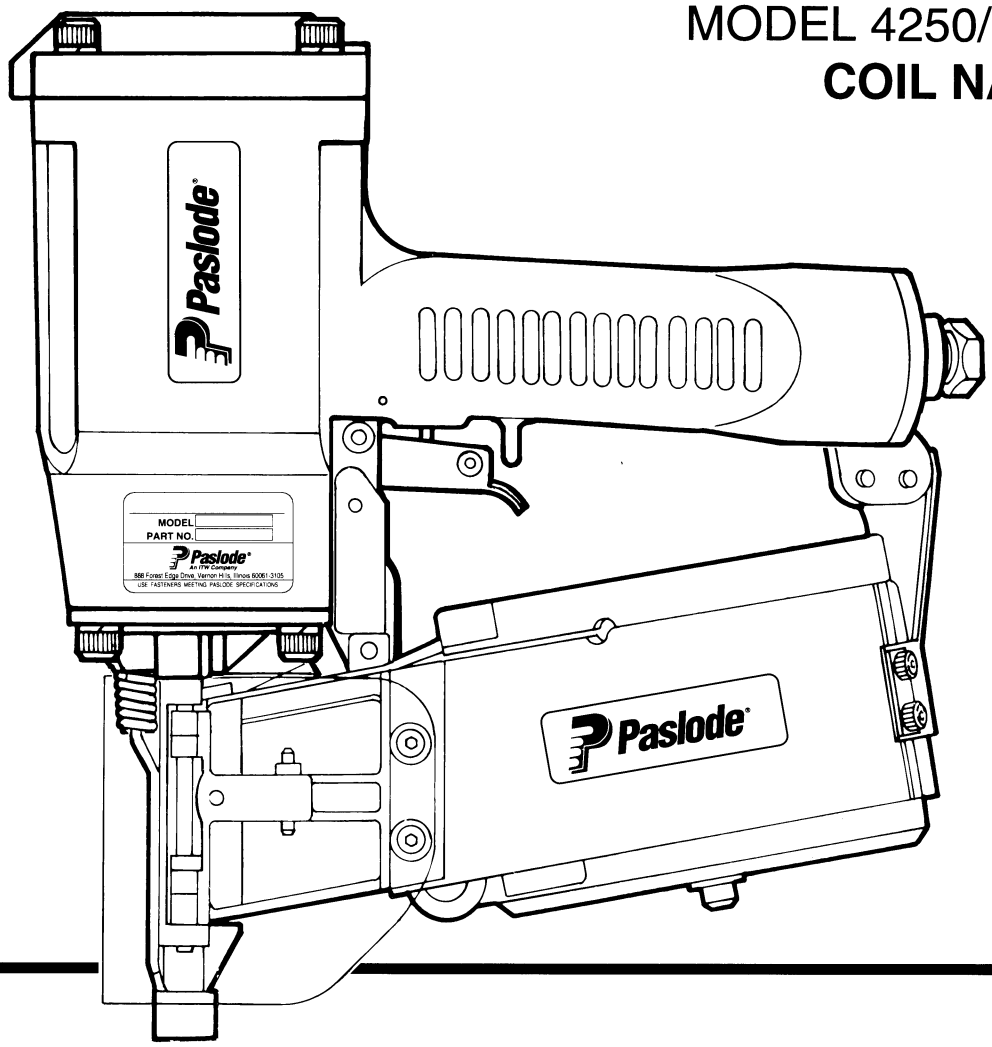

TOOL SCHEMATIC AND PARTS

IMPORTANT!

DO NOT DESTROY

Always refer to safety and maintenance manual #403606 for detailed information on this tool. It is the customer's responsibility to have all operators and service personnel read and understand this information.

PARTS LEGEND

4250/65C, 402920
4250/65CP, 402930

4250/65CQ, 404261 (EUROPE)
4250/65CPQ, 404262 (EUROPE)

1	091362	4	Socket Head Capscrew, 1/4-20 x 1-1/2" (4250/65C, CQ)
	404229	4	Socket Head Capscrew, 1/4-20 x 2-1/4" (4250/65CP, CPQ)
2	002187	6	Lock Washer, 1/4"
*3	402978	1	Cap, Diffuser
4	091363	2	Flexloc Thin Nut, #8-32
5	091860	1	Flexloc Nut
6	500011	1	Cap (4250/65CP, CPQ)
	402932	1	Cap (4250/65C, CQ)
*7	402955	1	Gasket, Cap
8	402959	1	Spring, Main Valve
9	500322	1	Retaining Ring
*10	402962	1	"O" Ring, Upper Valve Piston
11	402941	1	Upper Valve Piston
*12	092729	1	"O" Ring, Lower Valve Piston
*13	004163	1	"O" Ring, Lower Valve Piston
*14	402974	1	"O" Ring, Lower Valve Piston
15	500321	1	Lower Valve Piston
16	405211	1	Seal, Main Valve
*17	402963	1	"O" Ring, Main Valve Post
18	402944	1	Post, Main Valve
▲ 19	070502	1	Button Head Socket Cap Screw, #8-32 x 1/2"
20	400196	1	Gripco Lock Nut, 3/8-24
21	095412	2	Washer, Driver Blade
*22	091539	1	"O" Ring, Piston
23	402951	1	Piston
▲*24	402956	1	Driver Blade, (4250/65C, CQ)
	402957	1	Driver Blade, (4250/65CP, CPQ)
25	402954	1	Seal, Sleeve
26	406013	1	Sleeve (4250/65C, CQ)
	406012	1	Sleeve (4250/65CP, CPQ)
*27	402961	1	"O" Ring, Flange
*28	091022	1	"O" Ring, Sleeve
*29	402973	1	Sleeve/Bumper
30	403762	1	Bumper
31	097748	1	Spring, Valve Pin
32	097746	1	Valve Pin
33	401958	1	Valve Body
*34	092174	1	"O" Ring, Valve Body
35	026133	1	Roll Pin, 1/8" Dia. x 1" Lg.
36	403771	1	Guard, Work Contacting Element
37	403796	1	Roll Pin, 1/8" Dia. x 1-1/4" Lg.
38	402926	1	Housing
39	402079	1	Pin, Trigger
40	405147	1	Lever, Trigger
41	405144	1	Trigger
42	402668	1	Retaining Ring
43	500488	1	Grip, Handle
44	005849	1	Roll Pin
45	004502	1	Socket Head Capscrew, #10-32 x 5/8"
46	004238	4	Lock Washer, #10
47	404938	2	Logo, Housing (4250/65C, CP)
	405117	2	Logo, Housing (4250/65CQ, CPQ)
*48	091208	1	"O" Ring, Housing
49	402933	1	Flange, Nose
50	095417	4	Lock Washer, 5/16"
51	009016	4	Socket Head Capscrew, 5/16 - 18 x 1"
52	006787	2	Roll Pin, 3/16 Dia. x 1" Lg.
52A	401697	2	Roll Pin
53	092735	2	Socket Head Capscrew, 1/4-20 x 1-1/4"
54	402934	1	Nose (4250/65C, CQ)
	402935	1	Nose (4250/65CP, CPQ)
55	263239	1	Retaining Ring
56	402018	1	End Cap
57	402084	1	Bumper, Feed Claw Piston
58	402024	1	Spring
59	402038	1	Feed Claw Piston
*60	091541	1	"O" Ring, Feed Claw Piston
	091541	1	"O" Ring, Cylinder End Seal
61	402039	1	Cylinder End Seal
*62	402031	1	"O" Ring, Cylinder End Seal
63	402055	1	Feeder Body
64	402027	1	Air Feed Tube
*65	094295	1	"O" Ring, Housing
66	005562	1	Flat Socket Head Capscrew, 1/4-20 x 1"
*67	402041	1	Torsion Spring, Feed Claw
68	402486	1	Retaining Ring
69	402488	1	Pivot Pin, Feed Claw
70	404314	1	Feed Claw
71	402017	1	Hinge Pin, Door
72	402964	1	Spring, Work Contacting Element
73	009037	2	Socket Head Capscrew, #10-32 x 1/2"
74	008388	4	Flat Washer, #10
75	402666	1	Bushing
76	402936	1	Work Contacting Element (4250/65C, CP)
	402937	1	Work Contacting Element (4250/65CP, CPQ)
77	091733	3	Flexlock Nut, 1/4-20
78	402486	1	Retaining Washer
79	402487	1	Pivot Pin, Holdback Claw
80	402037	1	Holdback Claw
81	402026	1	Spring, Holdback Claw
82	402053	1	Door
83	402461	1	Locator
84	096893	1	Nameplate (4250/65C, CP)
	405553	1	Nameplate (4250/65 CQ, CPQ)
85	402659	2	Grommet
86	015298	2	Socket Head Capscrew, #8-32 x 5/8"
87	402938	1	Debris Shield (4250/65C, CQ)
	402939	1	Debris Shield (4250/65CP, CPQ)
88	402066	1	Cover, Magazine
▲ 89	091613	2	Socket Head Capscrew, #8-32 x 3/8"
90	402081	1	Reinforcement Plate
91	402083	1	Latch Plate

* Denotes normal wear items.

** Make sure warning label (500457) is properly affixed. Replace if necessary. Label available at no charge through the service department.

▲ Apply Loctite 242 (Blue) Part No. 093500

➔ Denotes new change

⚠ WARNING

All parts must be periodically inspected and replaced if worn or broken. Failure to do this can affect the tool's operation and present a safety hazard.

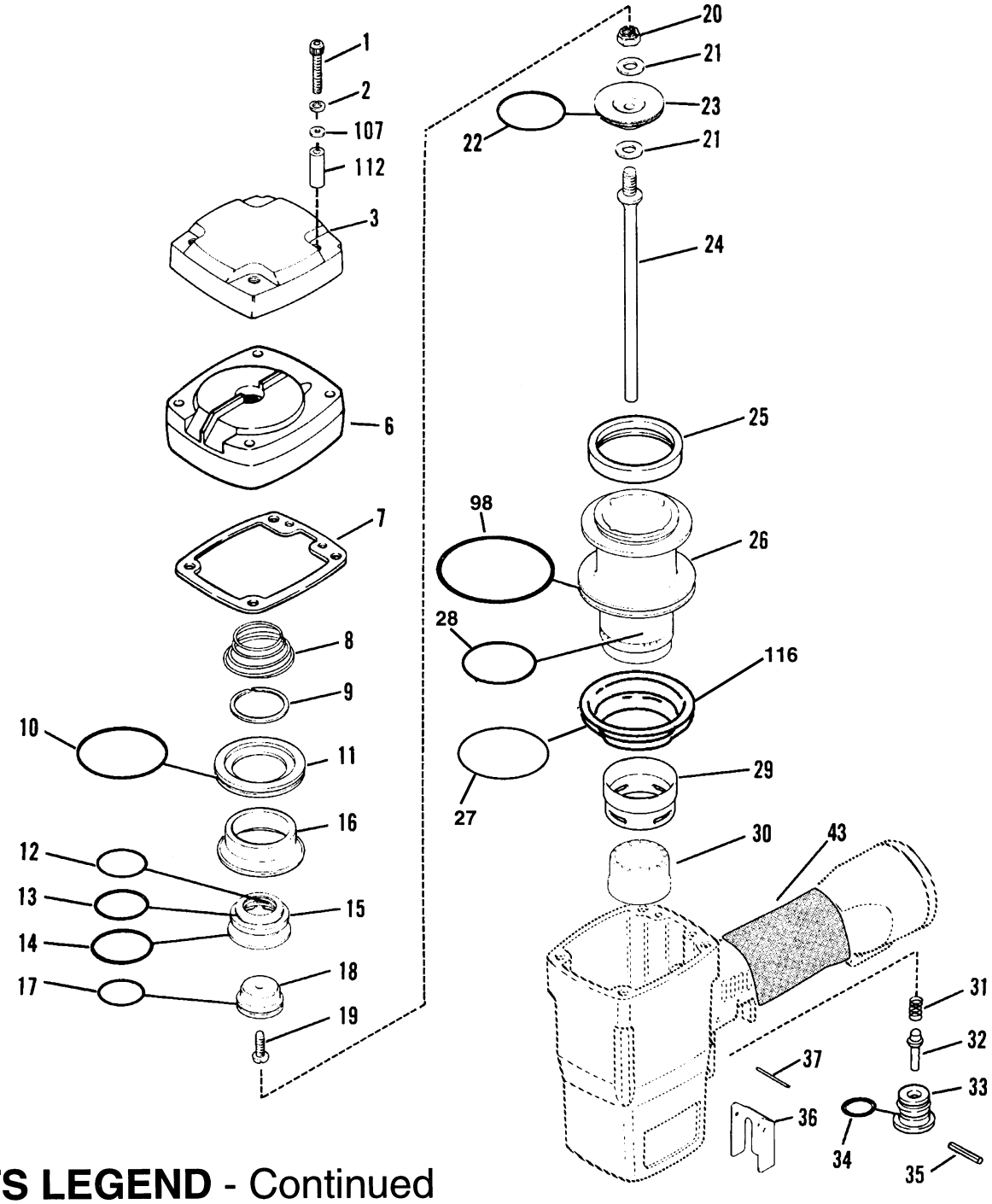

PARTS LEGEND - Continued

92	402655	1	Logo, Magazine (4250/65C, CP)
	405526	1	Fastener Label (4250/65CQ, CPQ)
93	402082	2	Nut Plate
94	091866	2	Roll Pin, 1/16" Dia. x 3/4" Lg.
95	403296	1	Cap, Post
96	402071	1	Extension Spring, Post
97	406046	1	Inner Center Post
98	401952	1	O-Ring, Sleeve
99	402075	1	Retaining Ring
100	402074	1	Nail Plate Assembly
101	406047	1	Outer Center Post
102	402905	1	Label
103	402946	1	Bracket, Magazine

▲104	004224	2	Socket Head Capscrew, #10-32 x 3/8"
105	402089	2	Teenut
106	401940	1	End Plug
107	091447	6	Flat Washer, 1/4"
108	402063	1	Magazine, 2-1/2"
109	009041	1	Socket Head Capscrew, 1/4-20 x 3/4"
110	091622	1	Reducing Pipe Bushing, 1/4" x 3/8"
111	404313	1	Insert, Feeder Body
112	402979	4	Spacer, Diffuser
113	091591	1	"O" Ring
114	404325	1	Stop Nut
**115	500457	1	Warning Label (4250/65C, CP)
116	406010	1	Flange, Sleeve

4250/65CQ
404261 (EUROPE)

4250/65C-PQ
404262 (EUROPE)

4250/65C
402920

4250/65C-P
402930

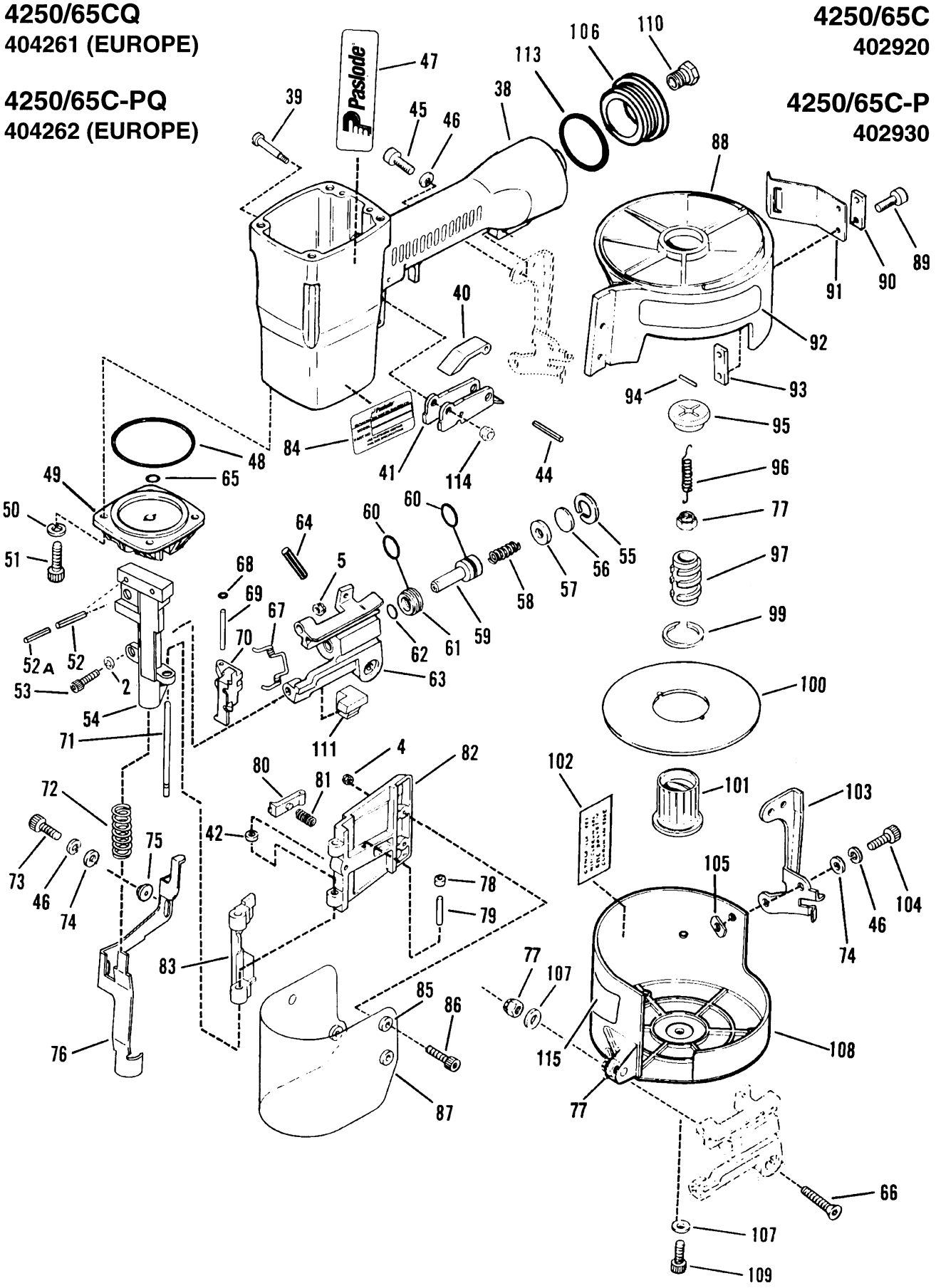

PARTS OFFERED AS ASSEMBLIES

402408 Trigger Assembly

Includes

40	405147	1	Lever, Trigger
41	405144	1	Trigger
44	005849	1	Roll Pin

500596 Post Assembly

Includes

77	091733	1	Flexloc Nut, 1/4 - 20
94	091866	2	Roll Pin, 1/16" Dia. x 3/4" Lg.
95	403296	1	Cap, Post
96	402071	1	Extension Spring, Post
97	406046	1	Inner Center Post
101	406047	1	Outer Center Post

500595 Tray Assembly

Includes

77	091733	1	Flexloc Nut, 1/4 - 20
94	091866	2	Roll Pin, 1/16" Dia. x 3/4" Lg.
95	403296	1	Cap, Post
96	402071	1	Extension Spring, Post
97	406046	1	Inner Center Post
99	402075	1	Retaining Ring
100	402074	1	Nail Plate Assembly
101	406047	1	Outer Center Post

402940 Cap Assembly (4250/65C, CQ)
500237 Cap Assembly (4250/65CP, CPQ)

Includes

6	500011	1	Cap (4250/65CP, CPQ)
	402932	1	Cap (4250/65C, CQ)
8	402959	1	Spring, Main Valve
9	500322	1	Retaining Ring
10	402962	1	"O" Ring, Upper Valve Piston
11	402941	1	Upper Valve Piston
12	092729	1	"O" Ring, Lower Valve Piston
13	004163	1	"O" Ring, Lower Valve Piston
14	402974	1	"O" Ring, Lower Valve Piston
15	500321	1	Lower Valve Piston
16	405211	1	Seal, Main Valve
17	402963	1	"O" Ring, Main Valve Post
18	402944	1	Post, Main Valve
19	070502	1	Button Head Socket Cap Screw, #8-32 x 1/2"

405212 Main Valve Assembly

Includes

9	500322	1	Retaining Ring
10	402962	1	"O" Ring, Main Valve Assembly
11	402941	1	Upper Valve Piston
12	092729	1	"O" Ring, Lower Valve Piston
13	004163	1	"O" Ring, Lower Valve Piston
14	402974	1	"O" Ring, Lower Valve Piston
15	500321	1	Lower Valve Piston
16	405211	1	Seal, Main Valve

403793 Piston Assembly (4250/65C, CQ)
403794 Piston Assembly (4250/65CP, CPQ)

Includes

20	400196	1	Gripco Lock Nut, 3/8-24
21	095412	2	Washer, Driver Blade
22	091539	1	"O" Ring, Piston
23	402951	1	Piston
24	402956	1	Driver Blade, (4250/65C, CQ)
	402957	1	Driver Blade, (4250/65CP, CPQ)

SAFETY INSTRUCTIONS

WEAR EYE AND HEARING PROTECTION

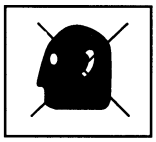

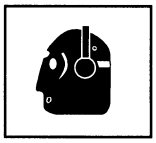

Always wear hearing protection and eye protection devices, including side shields when operating or working in the vicinity of a tool.

DO NOT EXCEED MAXIMUM RECOMMENDED AIR PRESSURE

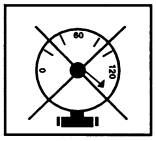

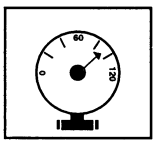

Operate the tool using only the recommended air pressure. Do not exceed the maximum air pressure marked on the tool. Be sure the air pressure gauge is operating properly and check it at least twice a day.

Never use any bottled air or gases such as oxygen to operate the tool since they could cause the tool to explode.

AIR CONSUMPTION CHART

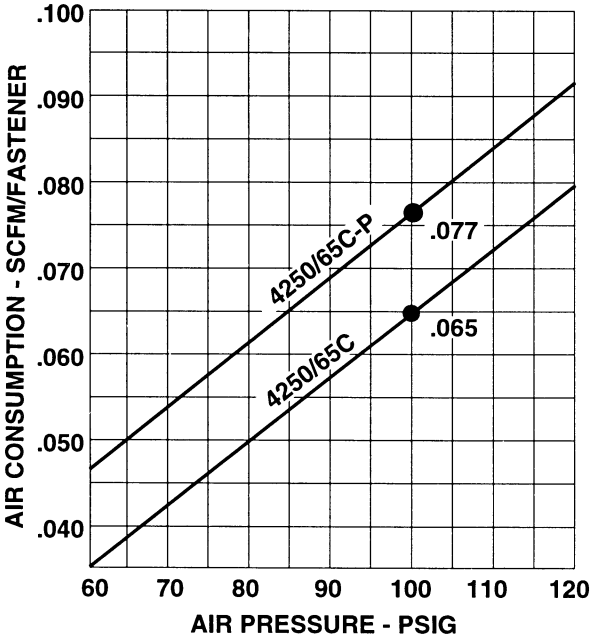

ACCESSORIES

Sequential Operating Kit

This special attachment is designed for sequential operation (stops "contact" firing). The operator must depress and hold the work contacting element against the work surface before pulling the trigger. This sequence must be repeated each time the tool drives a fastener.

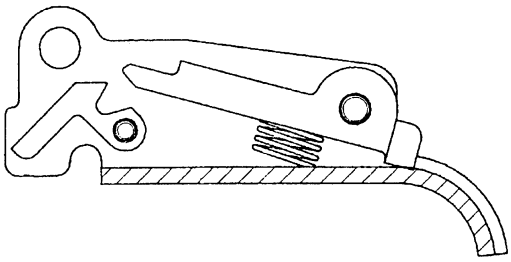

Part No. 406006

Remote Fire Valve

This valve via a positive air signal allows a machine mounted tool to be operated from an automatic air valve or foot pedal system.

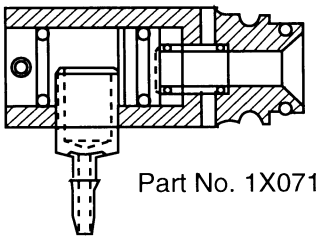

Part No. 1X0713

Lubricants and Loctite

Chemplex 710 Lubricant 1 lb.	Part No. 403734
Lubricating Oil 8 oz.	Part No. 219026
Lubricating Oil 8 oz. with Antifreeze	Part No. 219090
Loctite 242 (Blue) 1 oz.	Part No. 093500

Degreaser Cleaner

Ideal cleaner for all Paslode tools. Part No. 219086

Belt Hook

Attaches to cap of tool enabling you to carry tool on belt holder (offered below). Part No. 219017

Belt Hook Holder

Attaches to work belt and carries tool using the above belt hook. Part No. 219028

Safety Glasses

Clear	Part No. 402510
Tinted	Part No. 402512

Trigger Valve Repair Kit

This kit repairs all trigger valve air leaks. Part No. 219224

Paslode®
An Illinois Tool Works Company
888 Forest Edge Drive
Vernon Hills, Illinois 60061

Printed in U.S.A.
© 1998, Illinois Tool Works, Inc.

400581-14
2/98