Paslode®

MODEL 5250/65C
MODEL 5300/75C
MODEL 5300/75-CF
MODEL 5350/90C
COIL NAILERS

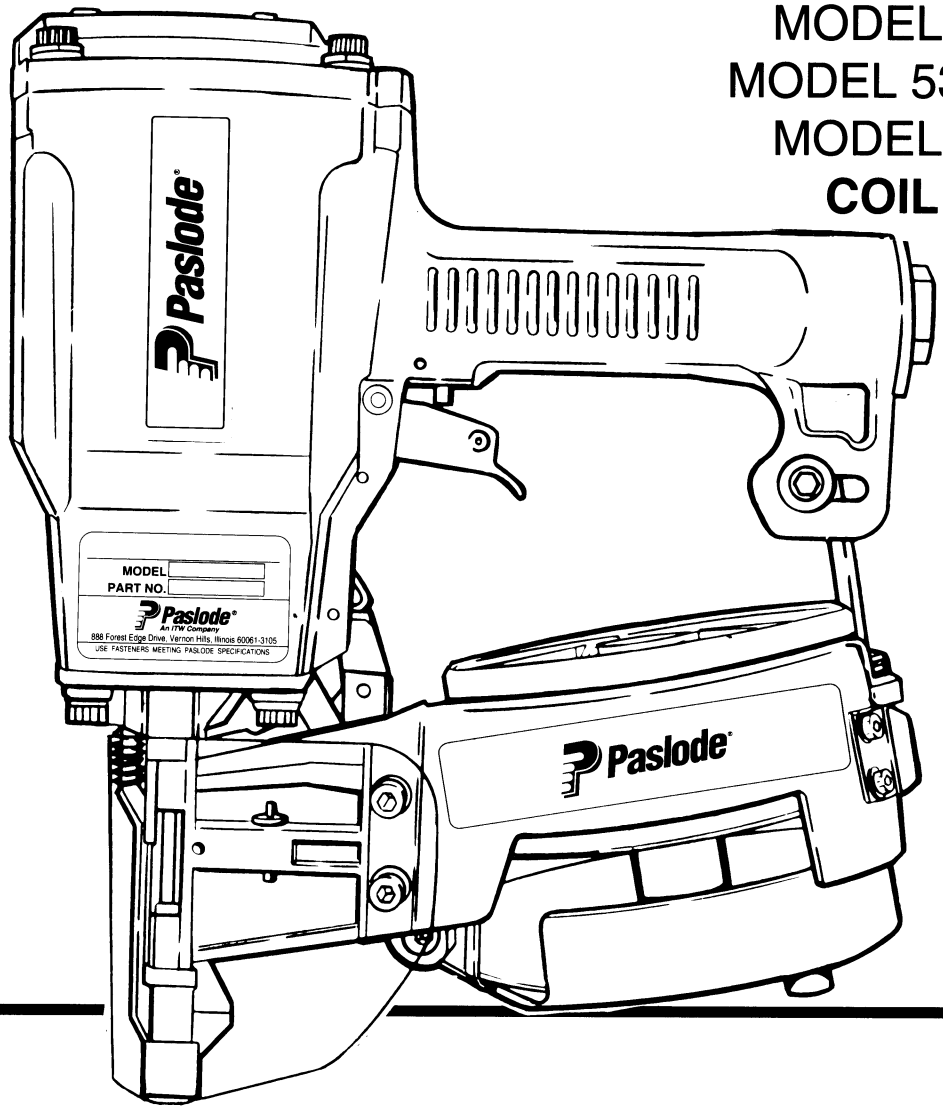

TOOL SCHEMATIC AND PARTS

IMPORTANT!

DO NOT DESTROY

Always refer to safety and maintenance manual #403606 for detailed information on this tool. It is the customer's responsibility to have all operators and service personnel read and understand this information.

PARTS LEGEND

5250/65C, 402090
5300/75C, 402030
5300/75CF, 500573
5350/90C, 402040

▲	1	091873	4	Socket Head Capscrew 1/4"- 20 x 2"
▲	1A	404367	4	Socket Head Capscrew 1/4" - 20 x 3 1/4"
	2	402447	4	Spacer, Diffuser
	3	402448	1	Air Diffuser
	4	500453	1	Bumper, Post
	5	404325	1	Stop Nut
	7	002187	6	Lock Washer, 1/4"
	8	091447	6	Flat Washer, 1/4"
	9A	500462	1	Cap (5350/90C)
	9	500452	1	Cap (All Other Models)
	*10	401983	1	Gasket
	11	500407	1	Spring
	12	406041	1	Retaining Ring
	*13	500461	1	"O" Ring, Inner Cap
	14	500455	1	Upper Valve Piston
	15	401946	1	Seal, Main Valve
	*16	092042	1	"O" Ring, Outer Cap
	*17	091208	1	"O" Ring, Lower Valve Piston
	*18	401950	1	"O" Ring, Lower Valve Piston
	19	500456	1	Lower Valve Piston
	20	500454	1	Post
	*21	095432	1	"O" Ring, Post
	22	402906	1	Button Head Screw 10-32 x 5/8"
	23	091861	1	Nut
	24	092116	2	Washer
	*25	092971	1	"O" Ring, Piston
	26	401956	1	Piston (5350/90C)
		402985	1	Piston (All Other Models)
▲	*27	402023	1	Driver Blade (5350/90C)
		402021	1	Driver Blade (All Other Models)
	28	402011	1	Seal, Sleeve
	29	401901	1	Sleeve (5350/90C)
		401900	1	Sleeve (All Other Models)
	*30	092762	1	"O" Ring, Sleeve
	*31	500367	1	"O" Ring , Sleeve (5350/90C)
		091024	1	"O" Ring, Sleeve (All Other Models)
	32	401984	1	Flange
	*33	401985	1	"O" Ring, Flange
	34	402993	1	Shim, Flange
	*35	401986	1	Bumper
	36	401936	1	Housing
	37	404937	2	Logo, Housing
	38	097748	1	Spring, Valve Pin
	39	097746	1	Pin, Valve
	*40	092174	1	"O" Ring, Valve Body
	41	401958	1	Body, Valve
	42	026133	3	Roll Pin, 1/8" Dia. x 1" Lg.
	43	401992	1	Spring, Intermediate Work Contacting Element
	44	401991	1	Intermediate Work Contacting Element
	45	096893	1	Nameplate
	46	402079	1	Pin, Trigger
	47	402668	1	Retaining Washer
	48	005849	1	Roll Pin
	49	405144	1	Trigger
	50	405147	1	Lever, Trigger
	51	500488	1	Grip, Handle
▲	52	401940	1	End Plug
	53	091622	1	Reducing Pipe Bushing
	54	009016	4	Socket Head Capscrew, 5/16 - 18 x 1"
	55	095412	1	Flat Washer, 5/16"
	56	402093	1	Spacer, Magazine Kit Bracket
	57	034976	1	Flexloc Nut, 5/16 - 18
	58	015298	2	Socket Head Capscrew, #8 - 32 x 5/8"
	59	402659	2	Steel Grommet
	60	005562	1	Flat Socket Head Capscrew, 1/4 - 20x1"
	61	091733	3	Flexloc Nut, 1/4 - 20
	62	404313	1	Insert, Feeder Body (5250/65C)
	63	008388	4	Flat Washer, #10
	64	004238	4	Lock Washer, #10
	65	402666	1	Bushing
	66	009037	2	Socket Head Capscrew, #10 - 32 x 1/2"
	67	402662	1	Debris Shield (5350/90C)
		402661	1	Debris Shield (All Other Models)
	*68	402008	1	Gasket, Nose
	69	402059	1	Flange, Nose
	70	006787	2	Roll Pin 3/16" Dia. x 1" Lg.
	70A	401697	2	Roll Pin
	71	402296	1	Spring, Work Contacting Element
	73	402062	1	Work Contacting Element (5350/90C)
☞		404053	1	Work Contacting Element (5300/75CF)
		402044	1	Work Contacting Element (All Other Models)
	74	095417	4	Lock Washer, 5/16"
	75	402046	1	Nose (5350/90C)
		402043	1	Nose (All Other Models)
	76	402017	1	Pin, Door Hinge
	77	402487	1	Holdback Pivot Pin
	78	402486	2	Retaining Washer
	79	402026	1	Holdback Spring
	80	402037	1	Holdback Claw
	81	402053	1	Door
	82	402461	1	Locator
	83	402055	1	Feeder Body
	84	263239	1	Retaining Ring
	85	402018	1	End Cap
	86	402084	1	Bumper, Feed Claw Piston
	87	402024	1	Spring
	*88	091541	1	"O" Ring, Feed Claw Piston
	*88A	091541	1	"O" Ring, Cylinder End Seal
	89	402038	1	Piston, Feed Claw
	*90	402031	1	"O" Ring, Cylinder End Seal
	91	402039	1	Cylinder End Seal
	92	402027	1	Air Feed Tube
	93	402488	1	Pivot Pin, Feed Claw
	**94	500457	1	Warning Label
	*95	402041	1	Torsion Spring, Feed Claw
	96	404314	1	Feed Claw (5250/65C)
		402016	1	Feed Claw (All Other Models)
	97	091363	2	Flexloc Thin Nut, #8 - 32
	98	402082	1	Nut Plate
	99	402083	1	Latch Plate
	100	402081	1	Reinforcement Plate
▲	101	091613	2	Socket Head Capscrew, #8 - 32 x 3/8"
	102	091866	2	Roll Pin, 1/18" Dia. x 3/4" Lg.
	103	403296	1	Cap, Post

* Denotes normal wear items.

** NOTE: Make sure Warning Label (500457) is properly affixed. Replace if necessary. Label available at no charge through Service Department.

▲ Apply Loctite 242 (Blue) Part No. 093500

➔ Denotes new change.

☞ Unique part to designated tool model.

WARNING

All parts must be periodically inspected and replaced if worn or broken. Failure to do this can affect the tool's operation and present a safety hazard.

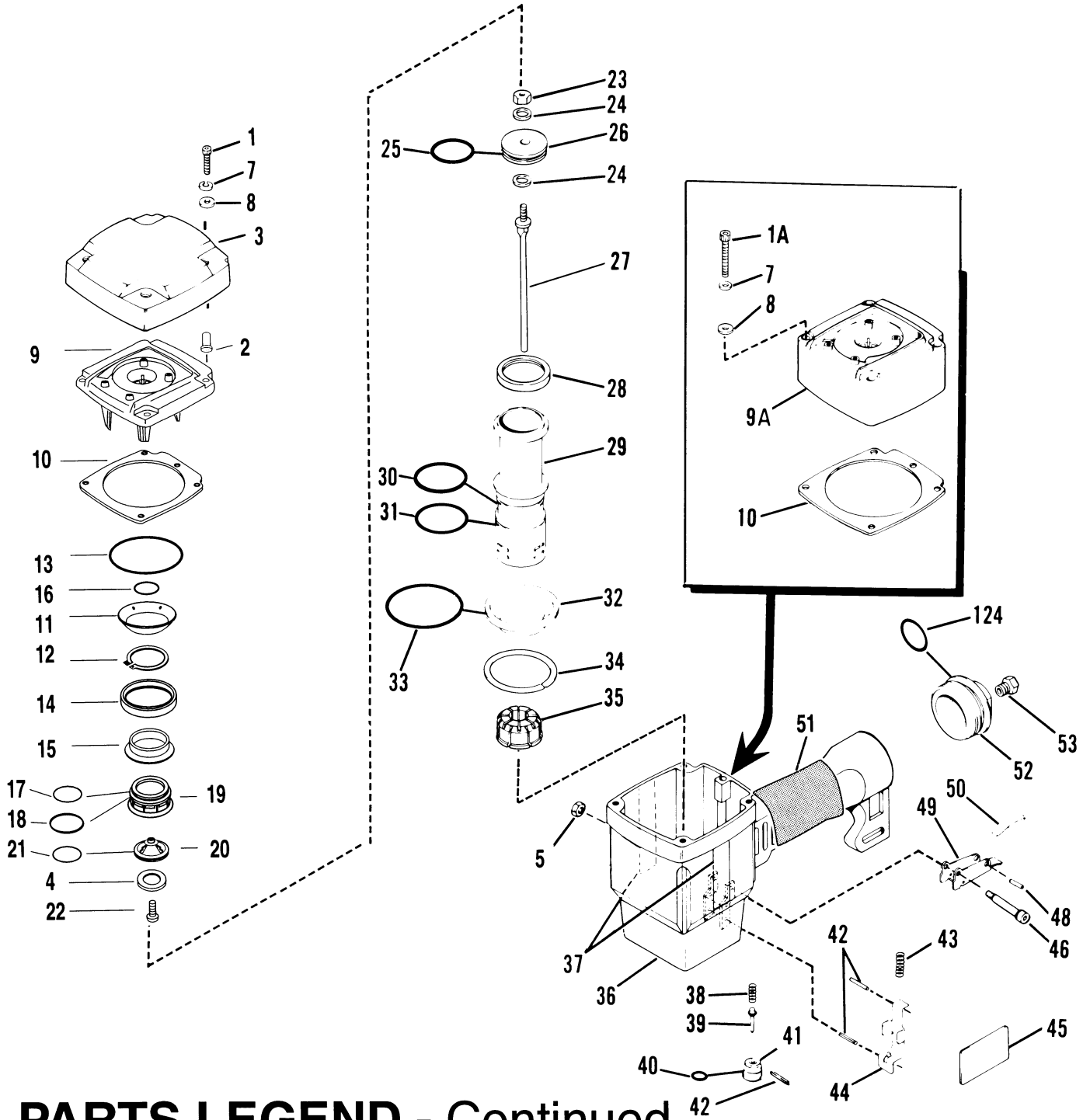

PARTS LEGEND - Continued

104	402071	1	Extension Spring, Post
105	406047	1	Outer Center Post
106	404046	1	Inner Center Post
108	091860	1	Flexlock Nut, 1/4 - 20
109	402063	1	Magazine (5250/65C)
	402064	1	Magazine (5300/75C,5300/75CF)
	402065	1	Magazine (5350/90C)
110	009041	1	Socket Head Capscrew, 1/4 - 20 x 3/4"
111	013631	1	Socket Head Capscrew, 5/16" - 18 x 1 1/4"
113	402088	1	Bracket, Magazine Kit
114	402089	2	Tee Nut

▲115	900295	2	Socket Head Capscrew, #10 - 32 x 3/8"
116	402905	1	Label (5250/65C)
	402904	1	Label (5300/75C,5300/75CF)
	402903	1	Label (5350/90C)
▲117	092735	2	Socket Head Capscrew, 1/4 - 20 x 1 1/4"
118	402074	1	Nail Plate Assembly
119	402075	1	Retaining Ring, Post
124	091591	1	"O" Ring, End Plug
125	402066	1	Cover, Magazine
126	402655	1	Logo, Magazine

5250/65C 402090

5350/90C 402040

5300/75C 402030

5300/75CF 500573

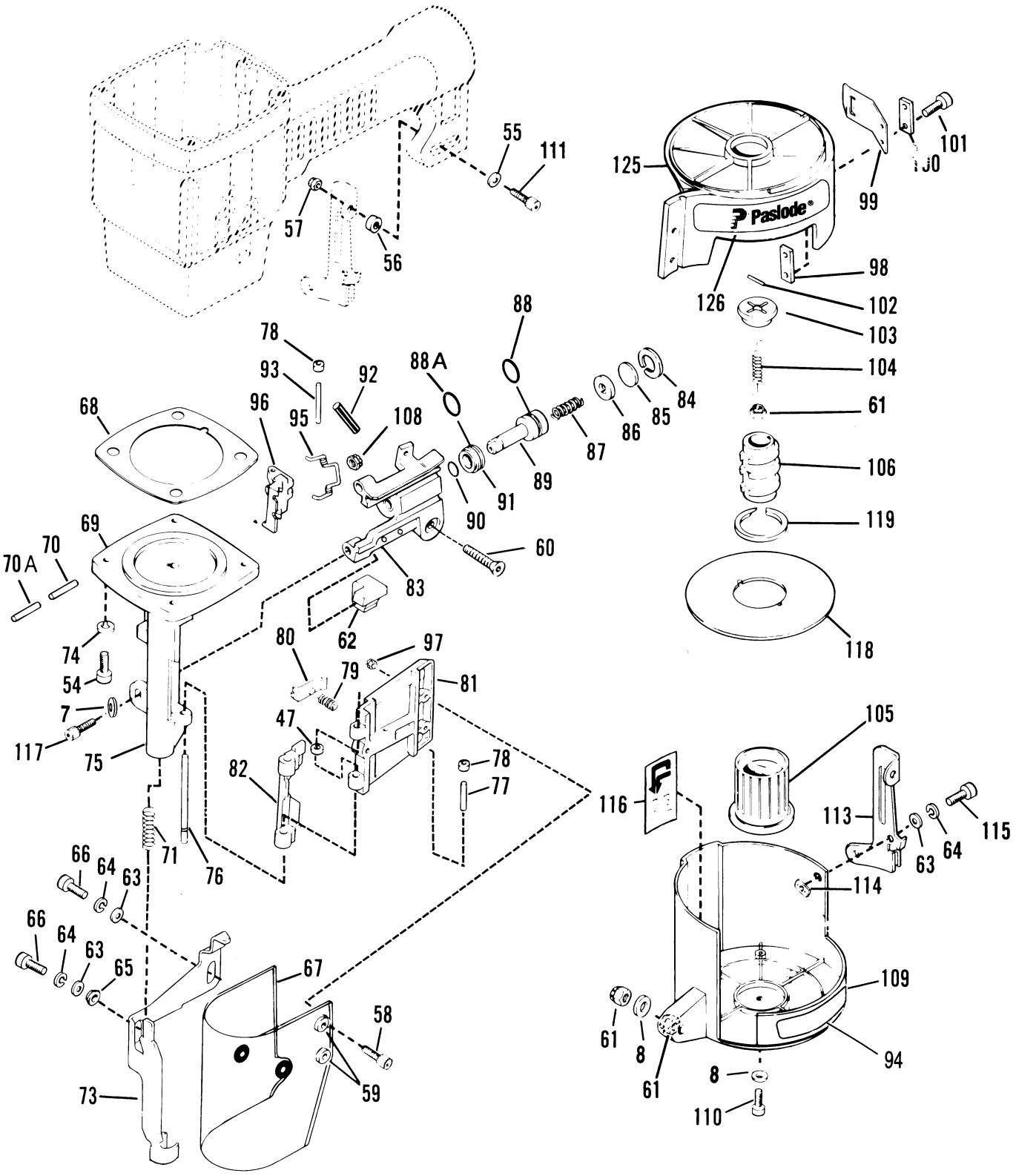

PARTS OFFERED AS ASSEMBLIES

402035 Piston Assembly
402036 Piston Assembly (5350/90C)

Includes

23	091861	1	Nut
24	092116	1	Washer
25	092971	1	"O" Ring, Piston
26	402985	1	Piston
	401956	1	Piston (5350/90C)
27	402021	1	Driver Blade
	402023	1	Driver Blade (5350/90C)

500595 Standard Tray Assembly (All Models)

Includes

61	091733	1	Flexloc Nut, 1/4 - 20
102	091866	2	Roll Pin, 1/18" Dia. x 3/4" Lg.
103	403296	1	Cap, Post
104	402071	1	Extension Spring, Post
105	406047	1	Outer Center Post
106	406046	1	Inner Center Post
118	402074	1	Nail Plate Assembly
119	402075	1	Retaining Ring

500596 Post Assembly (All Models)

Includes

61	091733	1	Flexloc Nut, 1/4 - 20
102	091866	2	Roll Pin, 1/18" Dia. x 3/4" Lg.
103	403296	1	Cap, Post
104	402071	1	Extension Spring, Post
105	406047	1	Outer Center Post
106	406046	1	Inner Center Post

AIR CONSUMPTION CHART

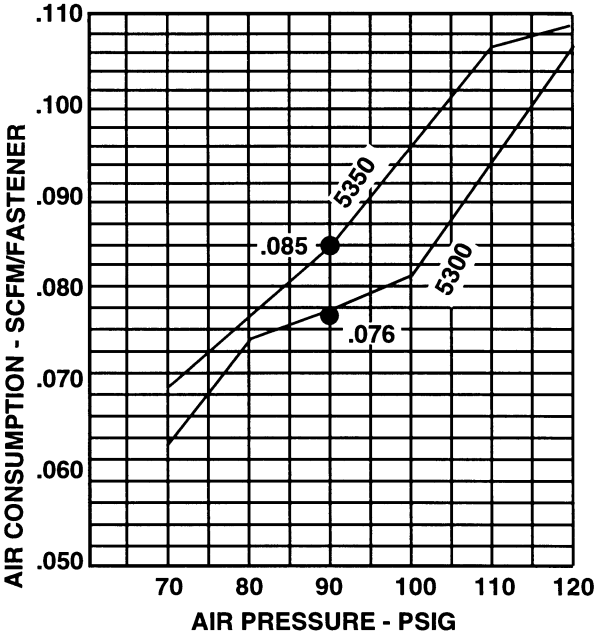

402408 Trigger Assembly (All Models)

Includes

48	005849	1	Roll Pin
49	405144	1	Trigger
50	405147	1	Lever, Trigger

500463 Main Valve Assembly (All Models)

Includes

12	406041	1	Retaining Ring
14	500455	1	Upper Valve Piston
15	401946	1	Seal, Main Valve
17	091208	1	"O" Ring, Lower Valve Piston
18	401950	1	"O" Ring, Lower Valve Piston
19	500456	1	Lower Valve Piston

500466 Cap Assembly
500467 Cap Assembly (5350/90C)

Includes

4	500453	1	Bumper, Post
9	500452	1	Cap
9A	500462	1	Cap (5350/90C)
11	500407	1	Spring
12	406041	1	Retaining Ring
13	500461	1	"O" Ring, Outer Cap
14	500455	1	Upper Valve Piston
15	401946	1	Seal, Main Valve
16	092042	1	"O" Ring, Inner Cap
17	091208	1	"O" Ring, Lower Valve Piston
18	401950	1	"O" Ring, Lower Valve Piston
19	500456	1	Lower Valve Piston
20	500454	1	Post
21	095432	2	"O" Ring, Post
22	402906	1	Button Head Screw, #10 - 32 x 5/8"

SAFETY INSTRUCTIONS

WEAR EYE AND HEARING PROTECTION

Always wear hearing protection and eye protection devices, including side shields when operating or working in the vicinity of a tool.

DO NOT EXCEED MAXIMUM RECOMMENDED AIR PRESSURE

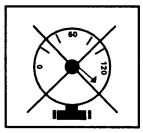

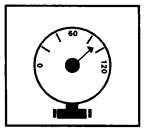

Operate the tool using only the recommended air pressure. Do not exceed the maximum air pressure marked on the tool. Be sure the air pressure gauge is operating properly and check it at least twice a day.

Never use any bottled air or gases such as oxygen to operate the tool since they could cause the tool to explode.

ACCESSORIES

Sequential Operating Kit

This special attachment is designed for sequential operation (stops "contact" firing). The operator must depress and hold the work contacting element against the work surface before pulling the trigger. This sequence must be repeated each time the tool drives a fastener.

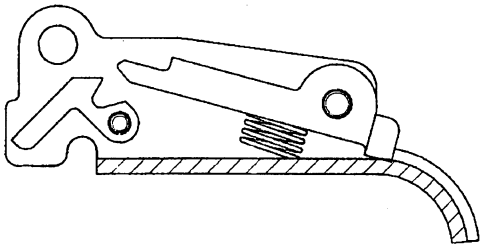

Part No. 406006

Auxiliary Tray

This assembly adjusts to accommodate shorter nail lengths for the 5300C Series tools

Use the auxiliary tray to drive these fasteners:

5300C	5350C
2 1/4"	2 3/4"
2"	2 1/2"
	2 1/4"
	2"

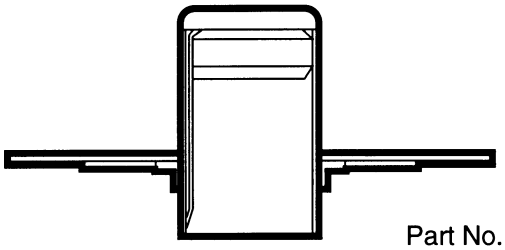

Part No. 402950

Toe Nailing Work Contacting Element with "Teeth"

This work contacting element has lower probe "teeth" that dig firmly into the wood for toe-nailing applications.

Note: This part (404053) is standard with model 5300/75CF only.

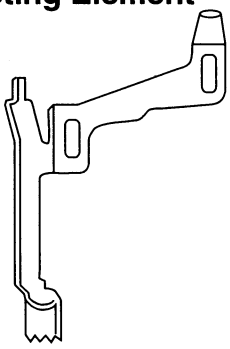

Part No. 404053
5250C & 5300C
Part No. 1X1378
5350C

Remote Fire Valve

This valve via a positive air signal allows a machine mounted tool to be operated from an automatic air valve or foot pedal system.

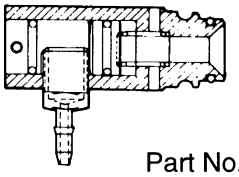

Part No. 1X0713

Hanger Bracket Kit

This kit allows the tool to be suspension mounted.

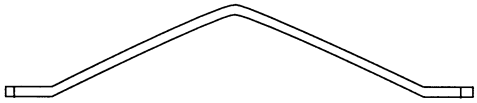

Part No. 1X0856

Lubricants and Loctite

Chemplex 710 Grease 1 lb.	Part No. 403734
Lubricating Oil 8 oz.	Part No. 219026
Lubricating Oil with anti-freeze	Part No. 219090
Loctite 242 (Blue) 1 oz.	Part No. 093500

Degreaser Cleaner

Ideal Cleaner for all Paslode Tools — Part No. 219086

Late Model 5000 Tool Repair Kit

This kit repairs all air leaks except for the trigger valve. — Part No. 219219

Trigger Valve Repair Kit

This kit repairs all trigger valve air leaks. Part No. 219224

Safety Glasses

Clear	Part No. 402510
Tinted	Part No. 402512

Paslode®
An Illinois Tool Works Company
888 Forest Edge Drive
Vernon Hills, Illinois 60061

Printed in U.S.A.
© 1997, Illinois Tool Works , Inc.

400546-11
11/97