MODEL : TYI-71/16LN

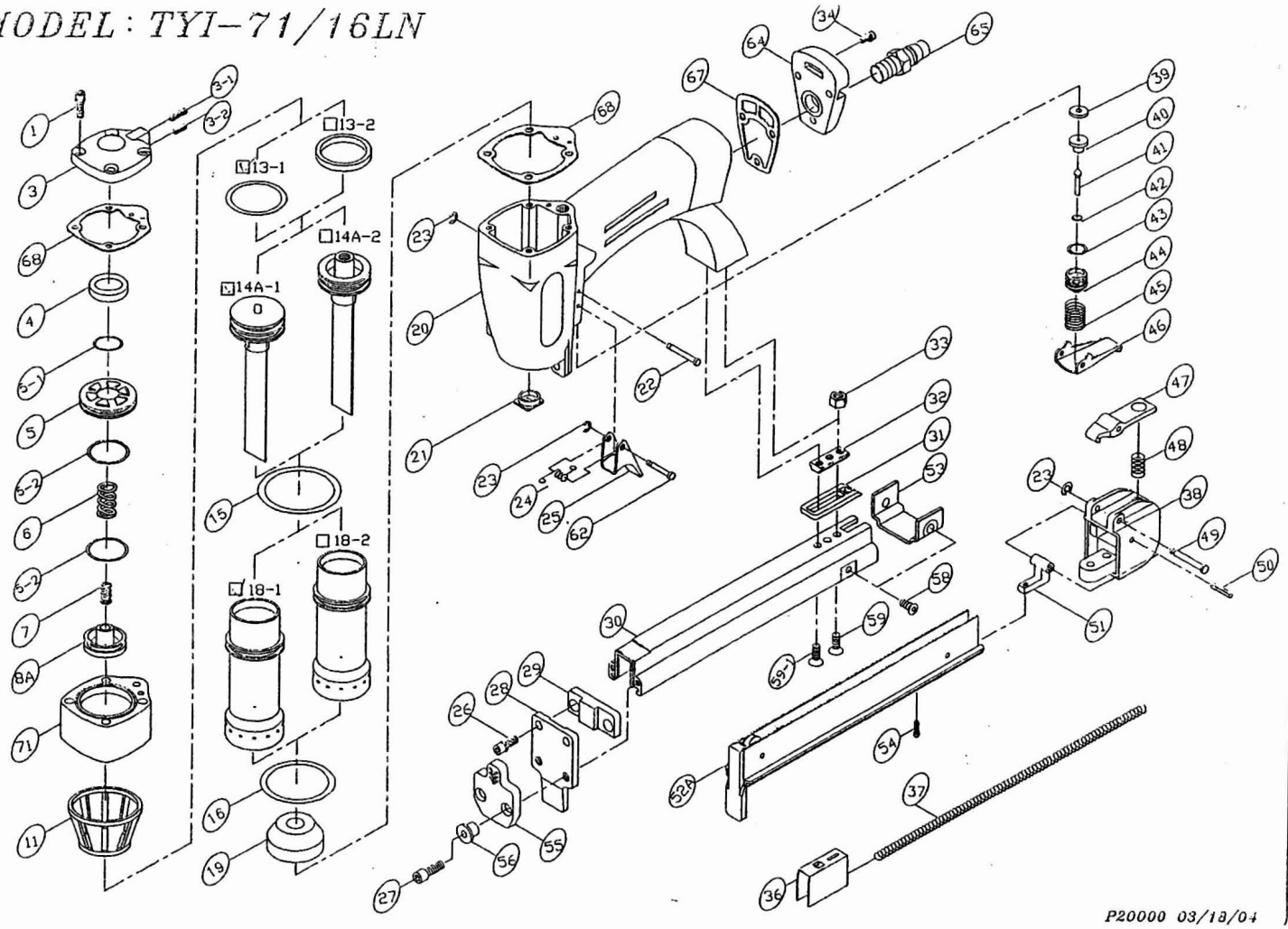

PARTS LIST (TYI-71/16LN) *WHEN ORDERING SPARE PARTS,PLEASE STATE ITEM No,PART No. AND DESCRIPTION.

ITEM	PART NO	DESCRIPTION	ITEM	PART NO	DESCRIPTION	ITEM	PART NO	DESCRIPTION
1	HS0540BW	HEX.SOC.HD.BOLT+SW	31	16803101	SET PLATE	68	16806801	GASKET**
3	16800301	CAP	32	19003902	SET PLATE	71	19807101	AIR ROOM
3-1	SS0604S	SET SCREW	33	LN0400N	LOCK NUT			
3-2	SS0304S	SET SCREW	34	HS0416BW	HEX.SOC.HD.BOLT+SW			
4	10200501	SEAL	36	10604801	PUSHER			
5	16801301	PISTON STOPPER	37	10404301	SPRING**			
5-1	OR1224R	O RING**	38	16803801	END COVER			
5-2	OR2725R	O RING**	39	12103301	SEAL			
6	16800501	SRRING**	40	12103401	TRIGGER VALVE HEAD			
7	10200401	SPRING**	41	12103501	TIRGGER VALVE STEM			
8A	10200801A	HEAD VALVE ASM.	42	OR1919H	O RING**			
11	10201201	COLLAR	43	OR1119R	O RING**			
13-1	OR1830R	O RING**	44	12103801	TIRGGER VALVE GUIDE			
13-2	11501303	PISTON RING	45	12103901	SPRING			
14A-1	18900802A	DRIVER ASSEMBLY**	46	10203001	TRIGGER			
14A-2	18900804A	DRIVER ASSEMBLY**	47	13908101	STOPPER			
15	OR3224R	O RING**	48	11106002	SPRING			
16	OR2420R	O RING**	49	13908401	STEPPED PIN			
18-1	19801801	CYLINDER	50	RP3022S	ROLLED PIN			
18-2	19801801G	CYLINDER	51	19004801	SET PLATE			
19	11502001	BUMPER**	52A	18904202A	STAPLE GUIDE UNIT			
20	16802001	BODY	53	10205301	SET PLATE			
21	18903001	JOINT GUIDE	54	HS0410B	HEX.SOC.HD.BOLT			
22	10202201	STEPPED PIN	55	19505501	NOSE COVER			
23	ER0200H	E RING	56	16805601	SOCKET			
24	11009101	TOR.SPRING	58	FH0406B1	FLAT.HD.BOLT			
25	11002801	TRIGGER	59	FH0420B	FLAT.HD.BOLT			
26	HS0518BW	HEX.SOC.HD.BOLT+SW	59-1	FH0412B	FLAT.HD.BOLT			
27	HS0416B	HEX.SOC.HD.BOLT	62	10206201	STEPPED PIN			
28	18903602	NOSE	64	16806401	END CAP			
29	10703801	SET PLATE	65	12106401	AIR PLUG			
30	18903801	MAGAZINE	67	16806701	GASKET			NO : P20000